Centre Number	Candidate Number	Name

CAMBRIDGE INTERNATIONAL EXAMINATIONS
General Certificate of Education
Advanced Level

PHYSICS **9702/05**

Paper 5 Practical Test

May/June 2003

1 hour 30 minutes

Candidates answer on the Question Paper.
Additional Materials: As specified in the Confidential Instructions.

READ THESE INSTRUCTIONS FIRST

Write your Centre number, candidate number and name on all the work you hand in.
Write in dark blue or black pen in the spaces provided on the Question Paper.
You may use a soft pencil for any diagrams, graphs or rough working.
Do not use staples, paper clips, highlighters, glue or correction fluid.

Answer **both** questions.

You are expected to record all your observations as soon as these observations are made, and to plan the presentation of the records so that it is not necessary to make a fair copy of them. The working of the answers is to be handed in.
Marks are mainly given for a clear record of the observations actually made, for their suitability and accuracy, and for the use made of them.
Additional answer paper and graph paper should be submitted only if it becomes necessary to do so.
You are reminded of the need for good English and clear presentation in your answers.

At the end of the examination, fasten all your work securely together.

If you have been given a label, look at the details. If any details are incorrect or missing, please fill in your correct details in the space given at the top of this page.

Stick your personal label here, if provided.

For Examiner's Use	
1	
2	
Total	

This document consists of **9** printed pages and **3** blank pages.

© CIE 2003
UNIVERSITY of CAMBRIDGE
Local Examinations Syndicate
[Turn over

It is recommended that you spend about 60 minutes on this question.

1 In this experiment you will investigate the relationship between the current in a copper wire and the orientation of a magnet suspended near to the copper wire. The magnet (with a pointer attached) has been suspended as shown in Fig. 1.1.

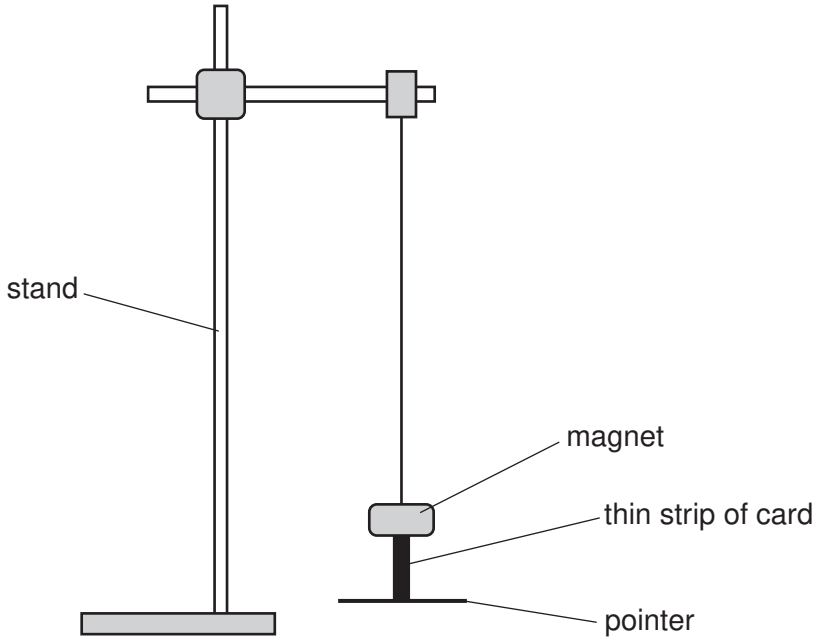

Fig. 1.1

A piece of straight copper wire has been taped to one edge of a 50 cm rule and a 360° protractor attached to the centre of the rule. You should not disturb the copper wire or the protractor from their positions on the rule during the course of the experiment.

(a) (i) Set up the circuit shown in Fig. 1.2.

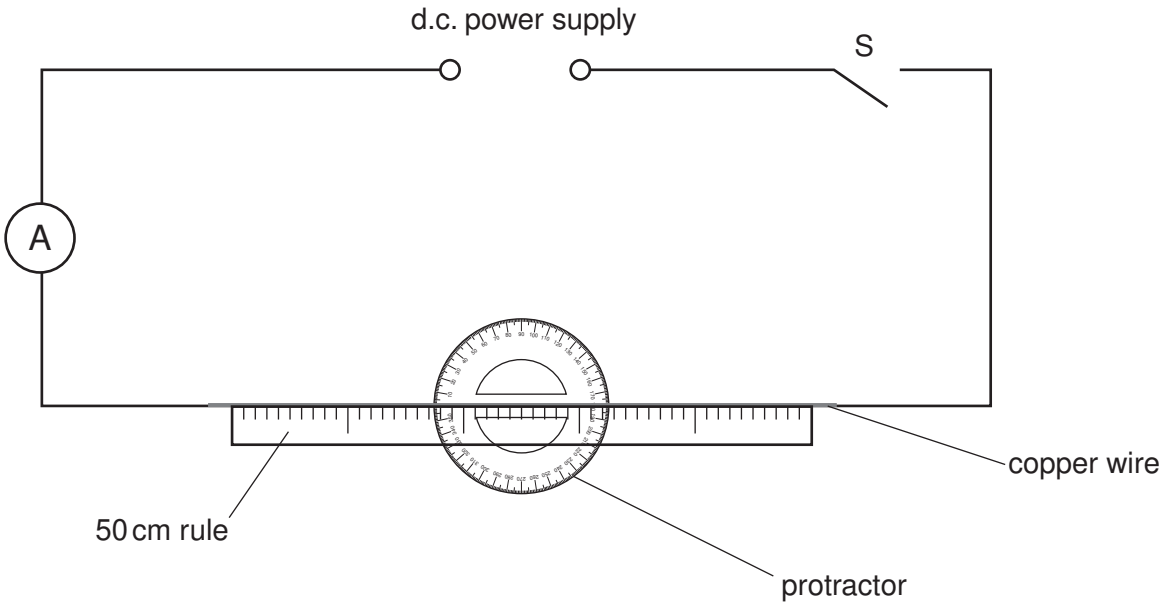

Fig. 1.2

(ii) Place the rule on a sheet of white paper below the magnet. The pointer should be perpendicular to the wire and the centre of the protractor directly below the point of suspension. The arrangement is shown in Fig. 1.3.

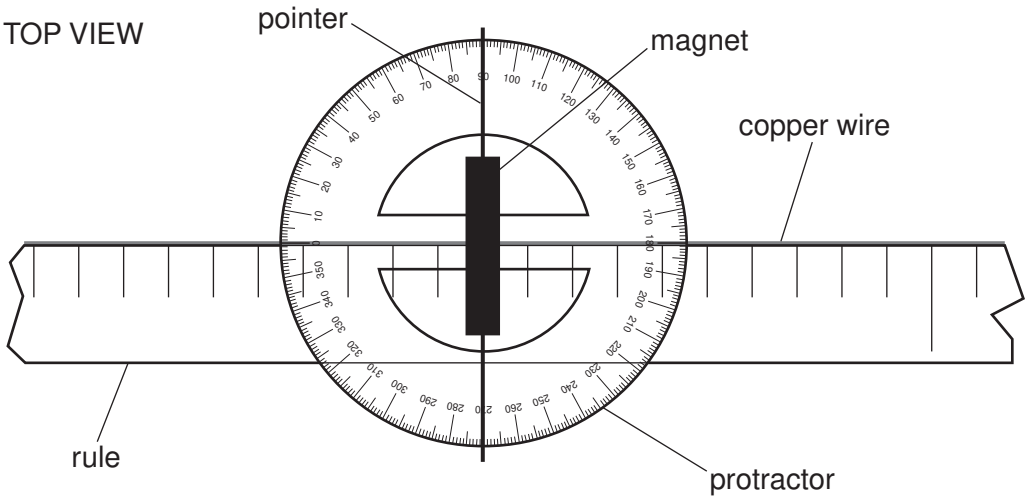

Fig. 1.3

(iii) Close switch S.

(iv) Adjust the current until the pointer shows a measurable deflection. When the pointer has stopped moving, measure and record the deflection θ and the current I.

θ = ...

I = ...

(v) Change the setting on the power supply unit and repeat **(iv)** until you have five more sets of readings for θ and I. The current should not exceed about 5 A. Include all six values of tan θ in your table of results.

(vi) Justify the number of significant figures that you have given for tan θ.

.....

.....

(vii) Open switch S.

(b) (i) Plot a graph of tan θ (y-axis) against I (x-axis).

(ii) Determine the gradient of the line of best fit.

gradient = ...

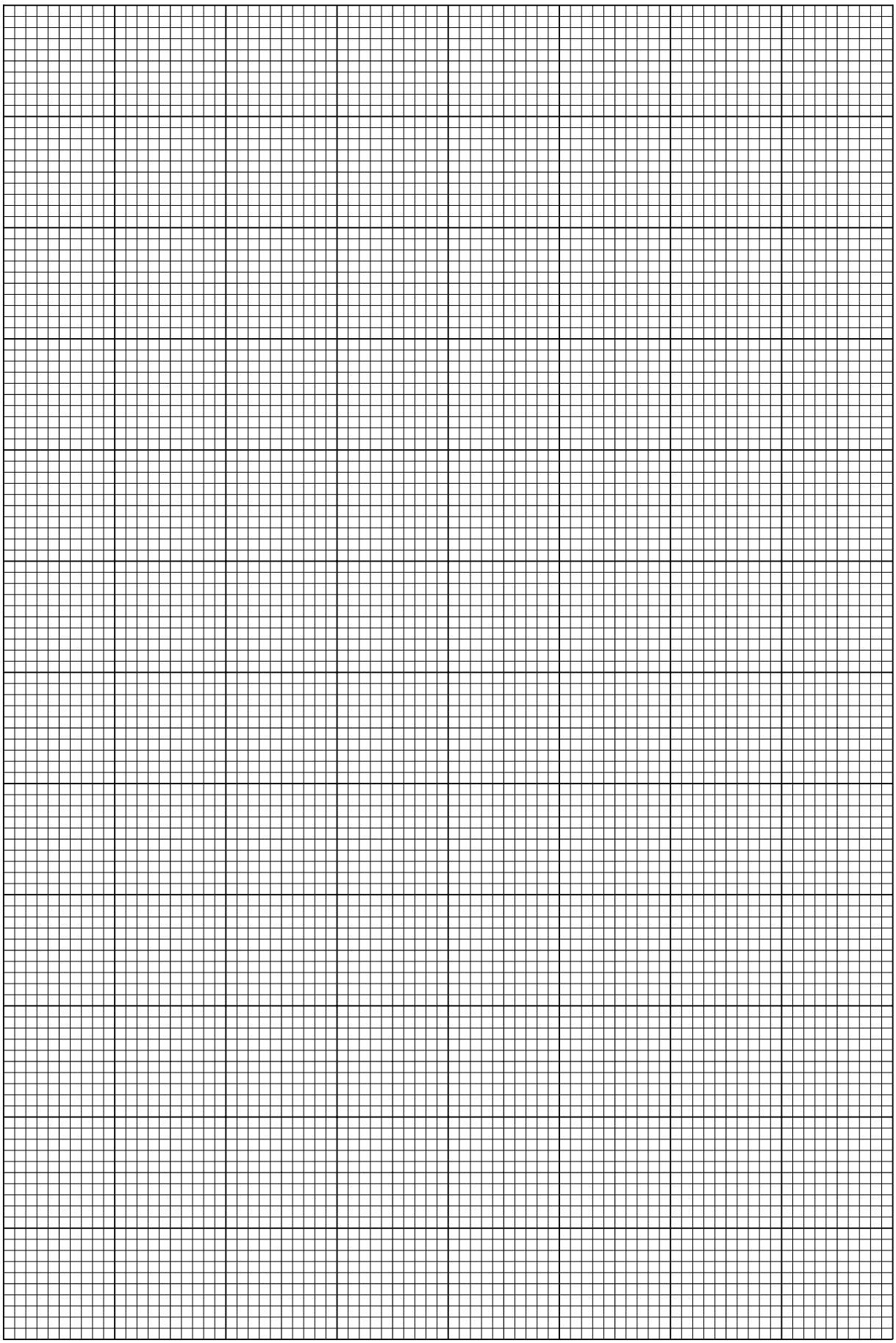

(c) The formula which relates θ and I is

$$\tan \theta = kI$$

where k is a constant.

Use your answer from **(b)(ii)** to state the value of k.
Include an appropriate unit with your value.

k = ...

(d) **(i)** Use the results from your experiment to calculate a value for θ when the current in the copper wire is 15 A.

θ = ...

(ii) Give one reason why it may be difficult to verify this experimentally.

.....

.....

.....

It is recommended that you spend about 30 minutes on this question.

2 One type of radiation detector known as a Geiger-Müller tube is shown in Fig. 2.1.

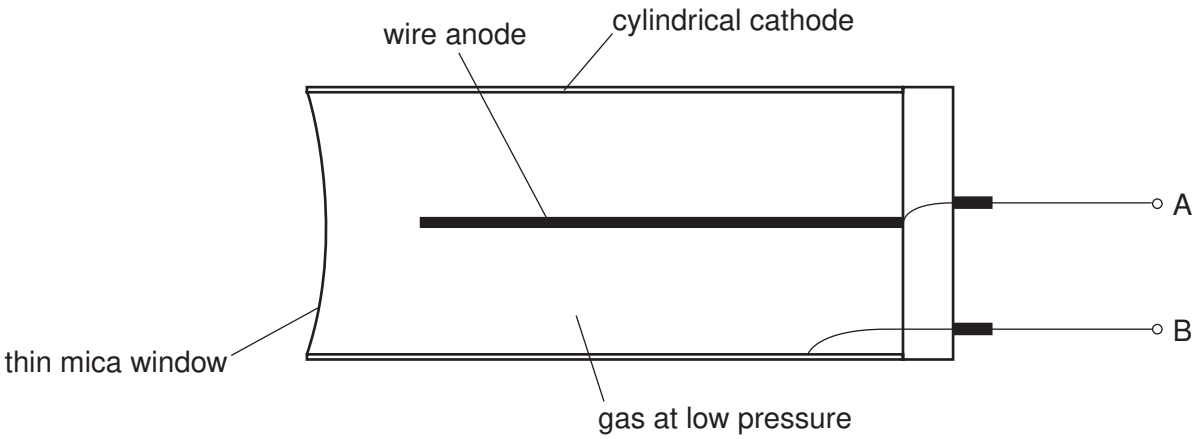

Fig. 2.1

In order for the tube to function, a potential difference V_{AB} has to be applied between A and B. The count rate registered by an instrument connected to the tube depends on several factors such as the distance from the radioactive source to the thin mica window, the activity of the source and V_{AB}. The tube can detect α, β and γ-radiation.

Design a laboratory experiment to investigate how the count rate due to γ-radiation **only** depends upon the potential difference V_{AB}. You have access to three different radioactive sources only. Information relating to each of these sources is given in the table below.

source	type of radiation emitted	half-life of source
Radium-226	α, β and γ	1600 years
Bismuth-214	β and γ only	20 minutes
Cobalt-60	β and γ only	5 years

You may assume that the following equipment is available, together with any other apparatus that may be found in a school or college science laboratory.

Aluminium plates of different thicknesses
Ammeter
Connecting wires
Datalogger
Geiger-Müller tube
Lead plates of different thicknesses
Metre rule
Oscilloscope
Ratemeter
Scaler
Signal generator
Source handling tool
Variable d.c. power supply
Voltmeter

You should draw a diagram showing the arrangement of your apparatus. In your account you should pay particular attention to

(a) which source you would use, giving a reason for your choice,

(b) the procedure to be followed, including how the count rate would be measured,

(c) the control of variables,

(d) any safety precautions you would take.

.....

.....

.....

.....

.....

.....

.....

.....

.....

BLANK PAGE

BLANK PAGE

BLANK PAGE